MATZ FORM

Bodega Bar

From its beginnings thousands of years ago as a cellar to store and serve wine, to its current form as a rustic wine bar of the type that Hemingway frequented, Bodegas have always been a place to meet, to socialize, and to relax.

Designer Studio Matz
Year 1950s

Category Bar Stool with Backrest
Model No. NV011, NV016
Usages Bar stool for dining, waiting areas, and private use.
Materials The Bodega Bar stool is hand-crafted with FSC certified American white oak frame. The chair comes in three frame color variations; Natural, Black and Walnut and can be upholstered with a variety of leathers and fabrics.

Dimensions

NV011 Size: W445 x D485 x H995 mm
Seat height : 830 mm

NV016 Size: W445 x D485 x H915 mm
Seat height : 750 mm

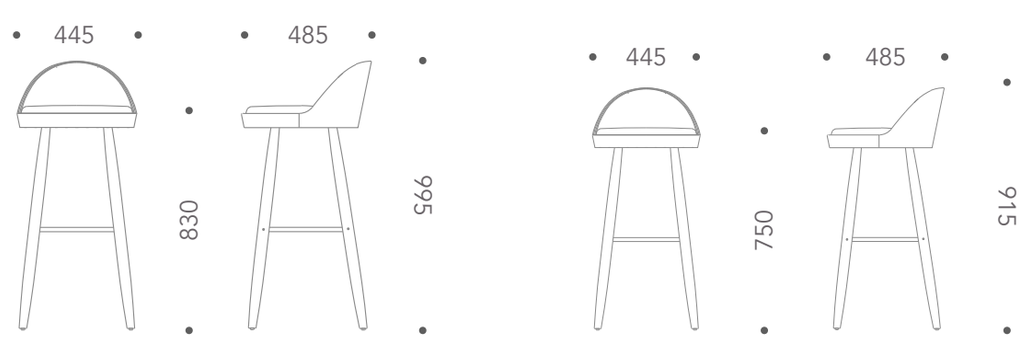

Oak Frames

Natural

Black Paint

Walnut Stain

Kvadrat Fabrics

K1
Atlas
Field 2

K2
Remix 3

K6
Steelcut Trio 3

K7
Fiord 2
Harald 3

K8
Divina Melange 3
Divina MD
Hallingdal 65

JMT Leathers

L3
Milano

L4
Troon

L5
Segovia
Balmoral

*Customer own fabrics and leathers available on requests

A 678 Shaanxi North Road 5F Shanghai China 200040 中国上海市陕西北路678号美丽园商厦5层 T +86 21 6380 4299 E hello@matzform.com W www.matzform.com

MATZ FORM